OPPLE LIGHTING.

Waterproof Performer G3

- Powerful range of waterproof luminaires in specific "sealed for life" design
- Quick installation thanks to its screwless endcap
- Supplied with vandal-proof stainless steel ceiling and suspension clips

IP66 | HACCP CONFORM | FLICKER-FREE | IK08

Specifications

Item Code	Item Description	Equivalent to (W)	Power (W)	Lumen	Efficacy (lm/W)	CCT (K)	Internal wiring (mm^2)	Max. input cable diameter (mm)	Weight (kg/pc)
On-Off									
543022016100	LEDWaterproof-P3 L1610-47W-4000	TL 2x58W	47	6580	140	4000	3x2.5	7-11	1.71

Packaging Information

Item			Box			
Item Code	Item Description	EU HS Code	Dimensions (mm) (LxWxH)	Gross Weight (kg)	EAN	pc/box
543022016100	LEDWaterproof-P3 L1610-47W-4000	94051190	1652x84x81	1.95	6941408825625	1
506005002100	LEDWaterproof-P3-Mounting Kit	73269098	290x290x240	0.07	6941408831244	1

Technical Specifications	
Lifetime (L70)	70,000 h
Lifetime (L80)	60,000 h
Lifetime (L90)	50,000 h
On-/Off-cycles	100,000
Colour consistency (SDCM)	4
Dimmability	On-Off
Beam angle	110°
Finishing	Grey RAL 7035
Colour rendering index (CRI)	≥ 80
Degree of protection (IP)	IP66
Impact strength	IK08
Protection class	II
Risk group (EN 62471)	RG0
With control gear	Yes
Glow wire test	850°C
Power factor	≥ 0.9
Input wire diameter	$1mm^2$ - $2.5mm^2$

Electrical Supply	
Frequency	50/60 Hz
Nominal voltage	220-240 V
DC input voltage	See catalogue appendix Connection Specifications

Mechanical Properties	
Material housing	Polycarbonate
UV resistant	Yes
Optical material	Polycarbonate
Mounting clips	Stainless steel

Ambient Conditions	
Operating temperature	-25~+45°C
Application temperature	+25°C
Storage environment	-25~+50°C

5 YEARS WARRANTY

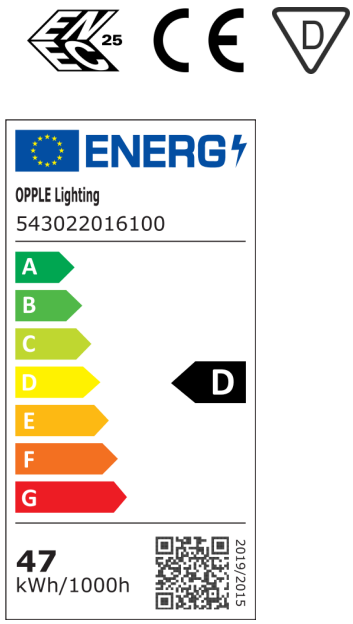

Version April 2023
Data subject to change

Dimensional Drawing (mm)

LEDWaterproof-P3 L1610

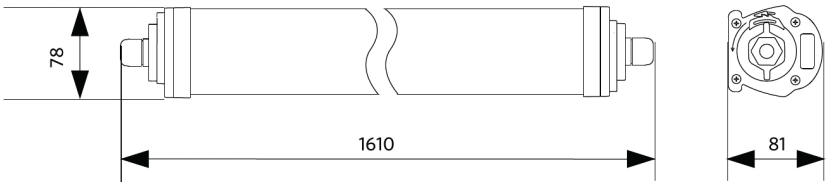

Installation Possibilities

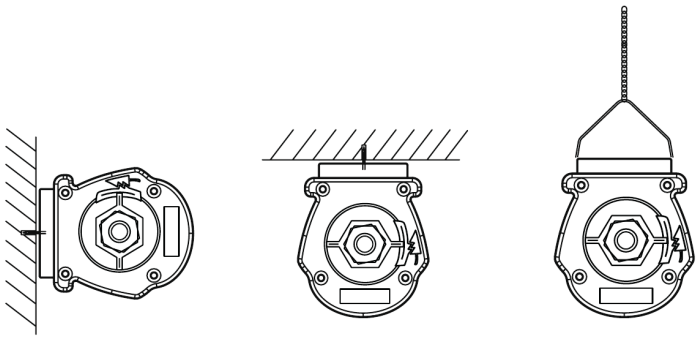
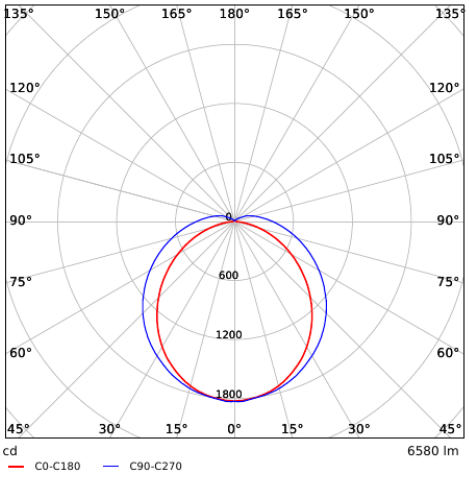
Photometric Data